REV	DATE	ECO	DESCRIPTION	BY	CK
00	2/93		RELEASED		

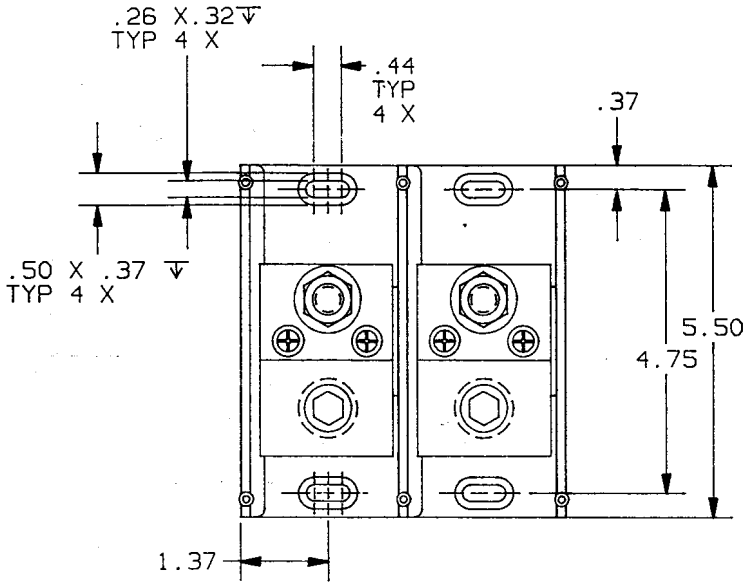

P/N	WIRE RANGE & TORQUE (IN-LBS)				UL		CSA
	PRIMARY		SECONDARY				
	RANGE	TORQUE	RANGE	TORQUE	FILE #	GUIDE #	REPORT #
68282	1000 MCM-250 MCM	500	1/2x1 3/16	480	E73571	XCFR2	LR69363
69282	1000 MCM-250 MCM	780	1/2x1 3/16	480	E73571	XCFR2	LR15469

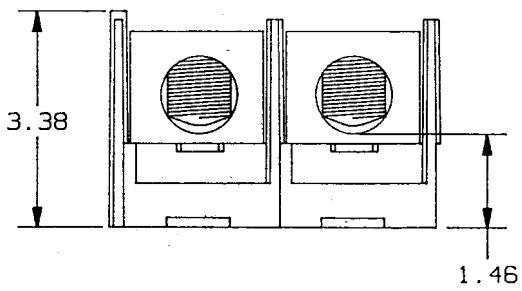

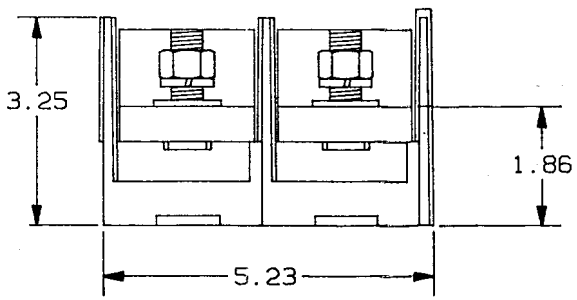

REFERENCE

FEB 1 0 1993

P/N 68282 (CU ONLY)
P/N 69282 (AL-CU)

2. (1) 1000 MCM- 250MCM X (1) 1/2-13 STUD CONN.
   2 POLE,600V

1. MATERIAL COMPOSITION AND RATING:
   BASE - THERMOPLASTIC 125°C RTI
   CONNECTOR - ALUMINUM OR COPPER ALLOY
   W/TIN PLATE.

NOTES: UNLESS OTHERWISE SPECIFIED

GOULD
GOULD INC.
P.O. BOX 720
MARBLE FALLS, TX 78654
CIRCUIT PROTECTION DIV.

DRAWN BY:	DATE:	UNIT. REL.
KDS	2/93	
CHECKED BY:	DATE:	SCALE:
GHO	2/93	NONE

TOLERANCE TO BE APPLIED UNLESS OTHERWISE SPECIFIED: .XXXX±.0005; .XXX±.005; .XX±.01; .X±.02; X/X±1/32
UNSPECIFIED ANGLES±1°, SPECIFIED ANGLES±0°30'
DIMENSIONS APPLY AFTER PLATING
ALL SURFACES TO BE 125 UNLESS OTHERWISE SPECIFIED
BREAK ALL SHARP EDGES
THIS DRAWING AND ALL INFORMATION THERE ON IS THE PROPERTY OF GOULD INC. AND IS SUBJECT TO RETURN ON DEMAND. THIS INFORMATION IS CONFIDENTIAL AND MUST NOT BE MADE PUBLIC OR COPIED UNLESS AUTHORIZED.

REFDOC:.

DESCRIPTION	IDENTIFICATION NO. & REVISION	
PDB	0580425	00