REV	DATE	ECO	DESCRIPTION	BY	CK
00	9/92		RELEASED PER ECO		

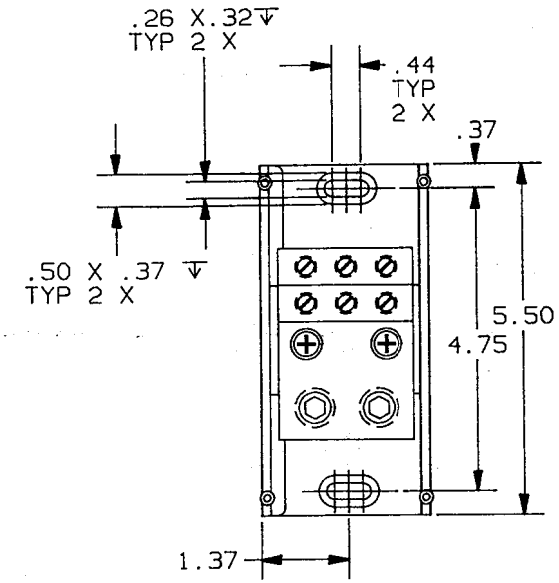

P/N	WIRE RANGE & TORQUE (IN-LBS)				UL		CSA
	PRIMARY		SECONDARY				
	RANGE	TORQUE	RANGE	TORQUE	FILE #	GUIDE #	REPORT #
68131	350-#6	350-#6 275	2/0-#14	2/0-#3 50	E73571	XCFR2	LR69363
				#4- #6 45			
				#8 40			
				#10- #14 35			
69131	350-#6	350-#6 275	2/0-#14	2/0-#6 120	E73571	XCFR2	LR15469
				#8 - #14 50			

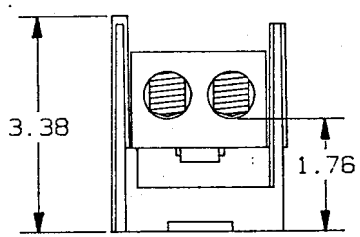

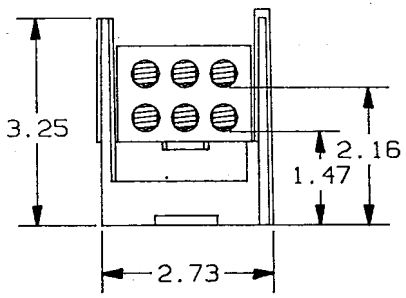

INCORPORATED

SEP 0 9 1992

P/N 68131 (CU ONLY)
P/N 69131 (AL-CU)

2. (2) 350 MCM-#6 X (6) 2/0-#14
   1 POLE, 600V.
1. MATERIAL COMPOSITION AND RATING:
   BASE - THERMOPLASTIC 125°C RTI
   CONNECTOR - ALUMINUM OR COPPER ALLOY
   W/TIN PLATE.

NOTES: UNLESS OTHERWISE SPECIFIED

GOULD
GOULD INC.
P.O. BOX 729
MARBLE FALLS, TX 78654
CIRCUIT PROTECTION DIV.

DRAWN BY:	DATE:	INIT. REL.
KDS	9/92	92-111
CHECKED BY: G. Oakley	DATE: 9/92	SCALE: NONE

DESCRIPTION: POB. (2)350 X (6)2/0

IDENTIFICATION NO. & REVISION: 05B0411 00

TOLERANCE TO BE APPLIED UNLESS OTHERWISE SPECIFIED: .XXXX±.00051, .XXX±.0051, .XX±.011, .X±.021 X/X±1/32
UNSPECIFIED ANGLES±1°, SPECIFIED ANGLES±0°30'
DIMENSIONS APPLY AFTER PLATING
ALL SURFACES TO BE 125√ UNLESS OTHERWISE SPECIFIED
BREAK ALL SHARP EDGES
THIS DRAWING AND ALL INFORMATION THERE ON IS THE PROPERTY OF GOULD INC. AND IS SUBJECT TO RETURN ON DEMAND. THIS INFORMATION IS CONFIDENTIAL AND MUST NOT BE MADE PUBLIC OR COPIED UNLESS AUTHORIZED.

REFDOC:-