REV	DATE	ECO	DESCRIPTION	BY	CK
00	6/93		RELEASED	KO	AE

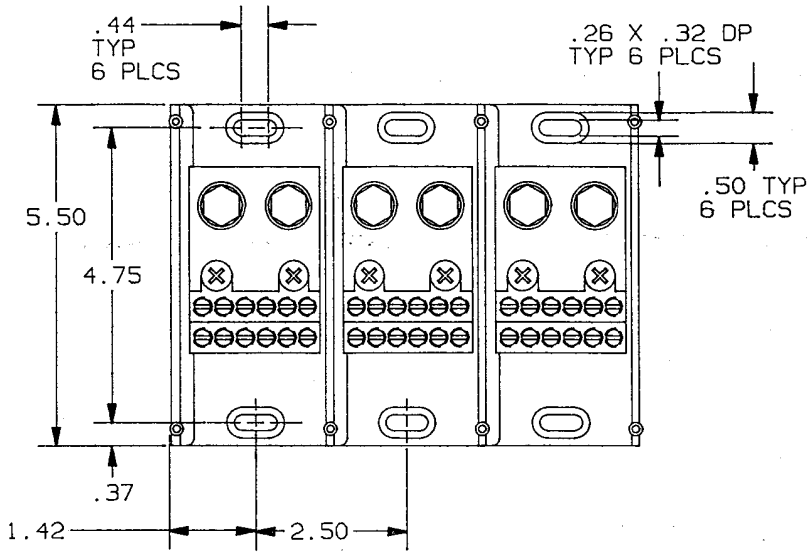

P/N	WIRE RANGE & TORQUE (IN-LBS)					UL	CSA
	PRIMARY			SECONDARY			
	RANGE	TORQUE		RANGE	TORQUE		
68113	500-#4	500-#4	375	#4-#14	#4-#6 45 #8 40 #10-#14 35	E73571	LR69363
69113	500-#4	500-#4	500	#4-#14	#4-#8 40 #10-#14 35	E73571	LR15469

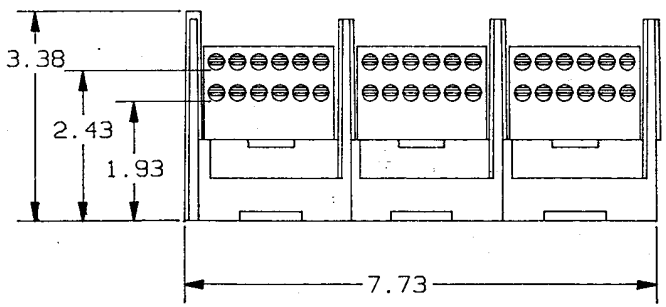

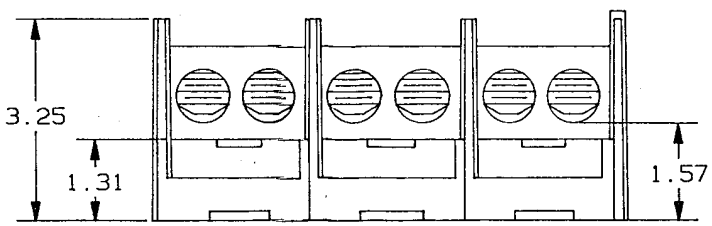

CONTROLLED COPY
ISSUED TO NEWBURYPORT
DATE JUL 0 6 1995

P/N 68113 (CU ONLY)
69113 (CU-AL)

2. (2) 500MCM - #4 X (12) #4 - 14, 3 POLE

1. MATL COMPOSITION AND RATING:
   BASE-THERMOPLASTIC-125 °C RTI
   CONNECTOR-ALUMINUM OR COPPER
   ALLOY-TIN PLATED.

NOTES: UNLESS OTHERWISE SPECIFIED

GOULD
CIRCUIT PROTECTION DIV.
GOULD INC.
P.O. BOX 729
MARBLE FALLS, TX 78654

DRAWN BY:	DATE:	UNIT. REL.
KDS	6/93	
CHECKED BY:	DATE:	SCALE:
AE	6/93	NONE

DESCRIPTION: PDB, 600V

IDENTIFICATION NO. & REVISION: 0580438 00

TOLERANCE TO BE APPLIED UNLESS OTHERWISE SPECIFIED: .XXXX±.0005; .XXX±.005; .XX±.01; .X±.02; X/X±1/32
UNSPECIFIED ANGLES±1°, SPECIFIED ANGLES±0°30'
DIMENSIONS APPLY AFTER PLATING
ALL SURFACES TO BE 125 UNLESS OTHERWISE SPECIFIED
BREAK ALL SHARP EDGES
THIS DRAWING AND ALL INFORMATION THERE ON IS THE PROPERTY OF GOULD INC. AND IS SUBJECT TO RETURN ON DEMAND. THIS INFORMATION IS CONFIDENTIAL AND MUST NOT BE MADE PUBLIC OR COPIED UNLESS AUTHORIZED.
REFDOC:-