REV	DESCRIPTION	DATE	APPD
0	RELEASED	9/22/89	[illegible]

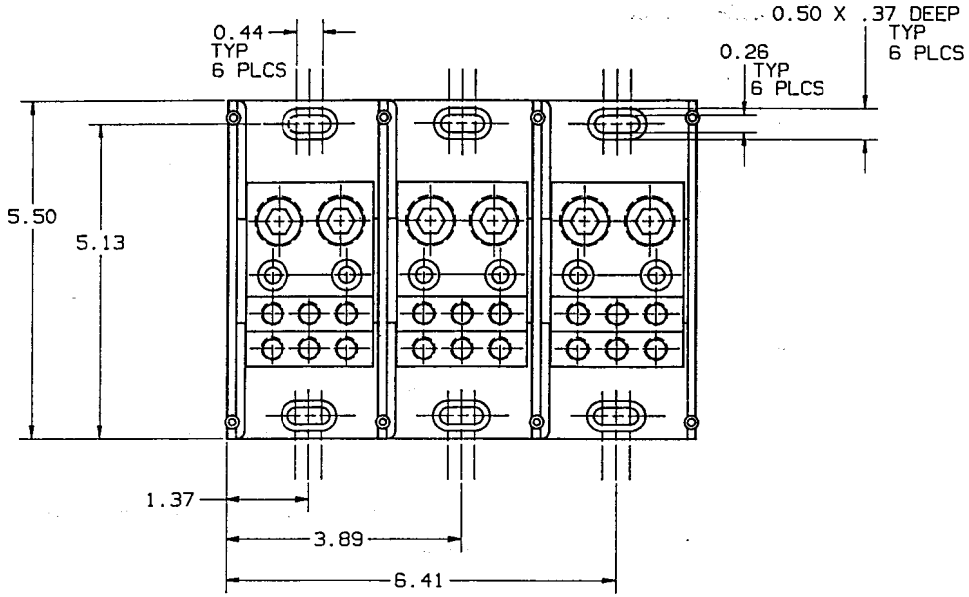

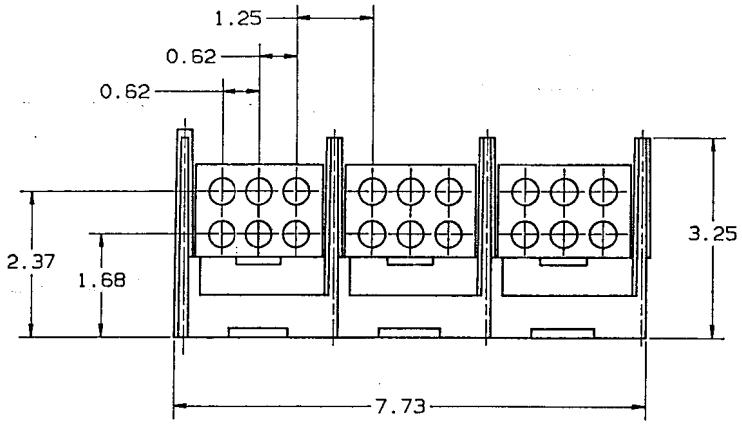

REFERENCE
MAR 1 6 1992

P/N 68103 (CU ONLY)
P/N 69103 (CU-AL)

NOTES UNLESS OTHERWISE SPECIFIED
- ALL DIMENSIONS ARE IN INCHES
- STAMP OR ETCH DWG. NO. ON PART
- REMOVE ALL BURRS AND SHARP EDGES
- TOLERANCES: XXXX±.0005; XXX±.005; XX±.01; X±.04; ANGLES ±0°30'

THIS DRAWING AND ALL INFORMATION THEREON IS THE PROPERTY OF GOULD, IS CONFIDENTIAL, MUST NOT BE COPIED OR MADE PUBLIC UNLESS AUTHORIZED AND IS SUBJECT TO RETURN ON DEMAND.

NEW DWG REQ ON		REV OR SIM DWG	

MATERIAL

FINISH

SIGNATURES		DATE
DRWN	[illegible]	9/21/89
CHKD	G. OAKLEY	9/22/89
ENGD		
APPD	[illegible]	9/22/89

GOULD SHAWMUT
GOULD SHAWMUT
P. O. BOX 729
MARBLE FALLS, TX 78654

PRODUCT INFO

TITLE
PDB, (2) 500 MCM-#4 X (6) 2/0-#12
3 POLE PC 600V

DWG NO	REV
05C0248	00

SCALE	FILE NO	SHEET
3/4		1 of 1