REV	DESCRIPTION	DATE	APPD
0	RELEASED	12/7/89	[illegible]
01	REVISED PER ECO 90-007	2/7/90	[illegible]
02	REVISED PER ECO 90-024	8/28/90	[illegible]

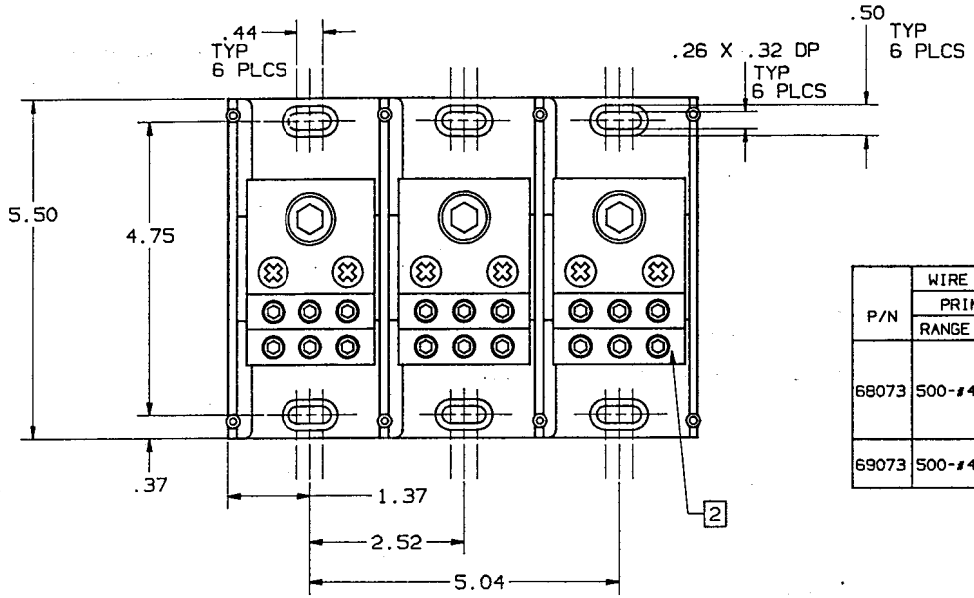

P/N	WIRE RANGE & TORQUE (IN-LBS)				U/L		CSA
	PRIMARY		SECONDARY				
	RANGE	TORQUE	RANGE	TORQUE	FILE NO.	GUIDE NO.	REPORT NO.
68073	500-#4	375	2/0-#12	2/0-#3 50	E73571	XCFR2	LR69363
				#4-#6 45			
				#8 40			
				#10-#12 35			
69073	500-#4	500	2/0-#12	2/0-#6 120	E73571	XCFR2	LR15469
				#8-#12 50			

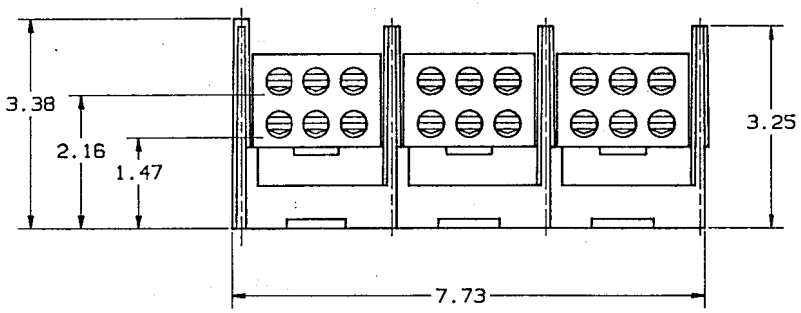

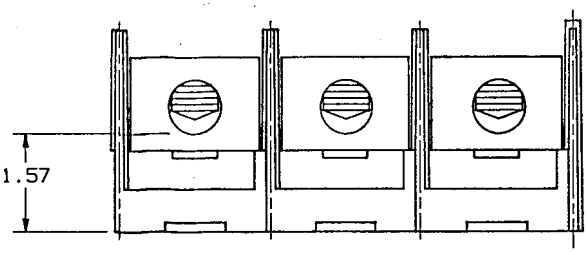

P/N 69073 (CU-AL)
P/N 68073 (CU ONLY)

REFERENCE

MAR 1 6 1992

2 P/N 68073 USES SLOTTED SET SCREW
P/N 69073 USES HEX SET SCREW.

1. MATL COMPOSITION AND RATING: BASE-POLYCARBONATE-125°C RTI.
CONNECTOR-ALUMINUM OR COPPER ALLOY-TIN PLATED.

NOTES: UNLESS OTHERWISE SPECIFIED

NOTES UNLESS OTHERWISE SPECIFIED
- ALL DIMENSIONS ARE IN INCHES
- STAMP OR ETCH DWG. NO. ON PART
- REMOVE ALL BURRS AND SHARP EDGES
- TOLERANCES: XXXX±.0005; XXX±.005; XX±.01; X±.04; ANGLES ±0°30'

THIS DRAWING AND ALL INFORMATION THEREON IS THE PROPERTY OF GOULD, IS CONFIDENTIAL, MUST NOT BE COPIED OR MADE PUBLIC UNLESS AUTHORIZED AND IS SUBJECT TO RETURN ON DEMAND.

NEXT DWG USED ON		REF OR SIM DWG	

MATERIAL

FINISH

SIGNATURES		DATE
DRWN	G. Williams	8/27/90
CHKD	G. Oakley	8/28/90
ENGD		
APPD	[illegible]	8/28/90

GOULD SHAWMUT
GOULD SHAWMUT
P. O. BOX 729
MARBLE FALLS, TX 78654

PRODUCT INFO

TITLE
PDB, (1) 500 MCM-#4 X (6) 2/0-#12
3 POLE PC 600V

DWG NO	REV
05C0254	02

SCALE	FILE NO	SHEET
3/4		1 of 1