REV	DATE	ECO	DESCRIPTION	BY	CK
00	9/13/94		RELEASED	CO	

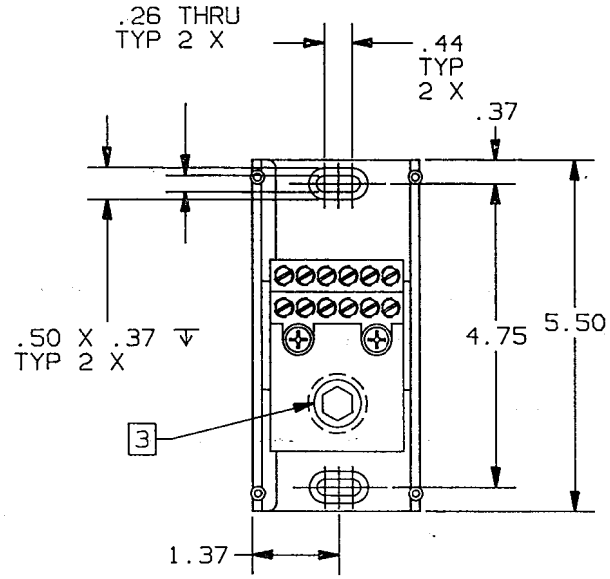

P/N	WIRE RANGE & TORQUE (IN-LBS)				UL		CSA
	PRIMARY		SECONDARY				
	RANGE	TORQUE	RANGE	TORQUE	FILE #	GUIDE #	REPORT #
68041	1000-250 MCM	1000-250 500	#4-#14	#4- #6 45	E73571	XCFR2	LR69363
				#8 40			
				#10-#14 35			
69041	1000-250 MCM	1000-250 780	#4-#14	#4-#8 40	E73571	XCFR2	LR15469
				#10-#14 35			

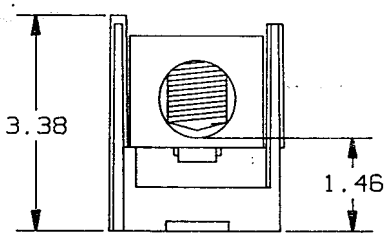

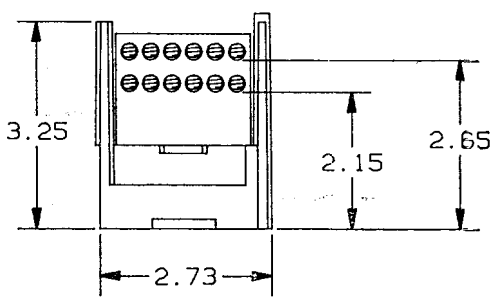

CONTROLLED COPY
TO Newburyport
DATE SEP 15 1994

4. TOLERANCE ±.031

[3] 68041 USES 3/8 HEX SOCKET WRENCH
69041 USES 9/16 HEX SOCKET WRENCH

2. (1) 1000-250 MCM X (12) #4-#14
1 POLE, 600V.

1. MATERIAL COMPOSITION AND RATING:
BASE - THERMOPLASTIC 125°C RTI
CONNECTOR - ALUMINUM OR COPPER ALLOY
W/TIN PLATE.

NOTES: UNLESS OTHERWISE SPECIFIED

P/N 68041 (CU ONLY)
P/N 69041 (AL-CU)

GOULD
CIRCUIT PROTECTION DIV.
GOULD INC.
P.O. BOX 728
MARBLE FALLS, TX 78654

DRAWN BY: KDS DATE: 9/94
INIT. REL.
CHECKED BY: DATE:
SCALE: NONE

TOLERANCE TO BE APPLIED UNLESS OTHERWISE SPECIFIED: .XXXX±.0005; .XXX±.005; .XX±.01; .X±.02; X/XX1/32
UNSPECIFIED ANGLES±1°, SPECIFIED ANGLES±0°30'
DIMENSIONS APPLY AFTER PLATING
ALL SURFACES TO BE 125 UNLESS OTHERWISE SPECIFIED
BREAK ALL SHARP EDGES
THIS DRAWING AND ALL INFORMATION THERE ON IS THE PROPERTY OF GOULD INC. AND IS SUBJECT TO RETURN ON DEMAND. THIS INFORMATION IS CONFIDENTIAL AND MUST NOT BE MADE PUBLIC OR COPIED UNLESS AUTHORIZED.
REFDOC:

DESCRIPTION: PDB
IDENTIFICATION NO. & REVISION: 05B0494 00