REV	DATE	ECO	DESCRIPTION	BY	CK
00	8/17/94		RELEASED	GO	

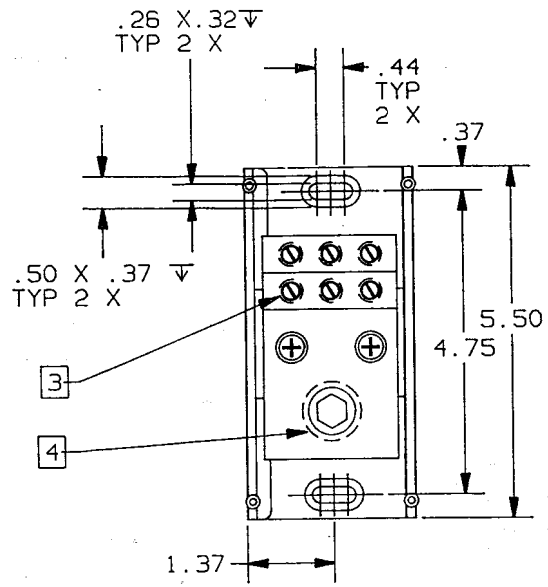

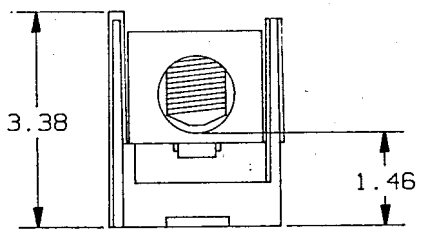

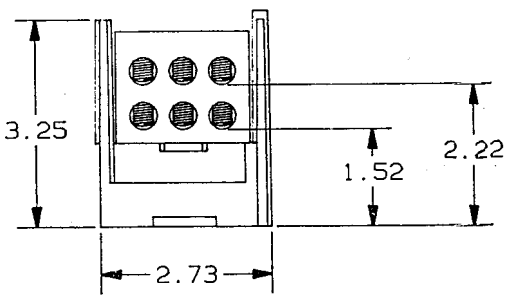

P/N	WIRE RANGE & TORQUE (IN-LBS)				UL		CSA
	PRIMARY		SECONDARY				
	RANGE	TORQUE	RANGE	TORQUE	FILE #	GUIDE #	REPORT #
68031	250MCM-1000MCM	500	2/0-#14	2/0-#3 50	E73571	XCFR2	LR69363
				#4- #6 45			
				#8 40			
				#10- #14 35			
69031	250MCM-1000MCM	780	2/0-#14	2/0-#6 120	E73571	XCFR2	LR15469
				#8 - #14 50			

4 68031 USES 3/8 HEX SOCKET WRENCH
69031 USES 9/16 HEX SOCKET WRENCH.

3 68031 USES STD SLOT DRIVER
69031 USES 3/16 HEX SOCKET WRENCH.

2. (1) 250MCM-1000MCM X (6) 2/0-#14, 1 POLE, 600V.

1. MATERIAL COMPOSITION AND RATING:
BASE - THERMOPLASTIC 125°C RTI
CONNECTOR - ALUMINUM OR COPPER ALLOY
W/TIN PLATE.

NOTES: UNLESS OTHERWISE SPECIFIED

RELEASE TO Newburyport
DATE SEP 09 1994

P/N 68031 (CU ONLY)
P/N 69031 (AL-CU)

GOULD
CIRCUIT PROTECTION DIV.
GOULD INC.
P.O. BOX 729
MARBLE FALLS, TX 78654

DRAWN BY: KDS DATE: 8/94
INIT. REL.
CHECKED BY: DATE:
SCALE: NONE

TOLERANCE TO BE APPLIED UNLESS OTHERWISE SPECIFIED: .XXXX±.0005; .XXX±.005; .XX±.011; .X±.021 X/X±1/32
UNSPECIFIED ANGLES±1°, SPECIFIED ANGLES±0°30'
DIMENSIONS APPLY AFTER PLATING
ALL SURFACES TO BE 125 UNLESS OTHERWISE SPECIFIED
BREAK ALL SHARP EDGES
THIS DRAWING AND ALL INFORMATION THERE ON IS THE PROPERTY OF GOULD INC. AND IS SUBJECT TO RETURN ON DEMAND. THIS INFORMATION IS CONFIDENTIAL AND MUST NOT BE MADE PUBLIC OR COPIED UNLESS AUTHORIZED.

REFDOC:

DESCRIPTION: PDB, (1) 1000MCM X (6) 2/0
IDENTIFICATION NO. & REVISION: 05B0485 00