REV	DATE	ECO	DESCRIPTION	BY	CK
00	7/93		RELEASED		

UNCONTROLLED COPY

MAY 14 1997

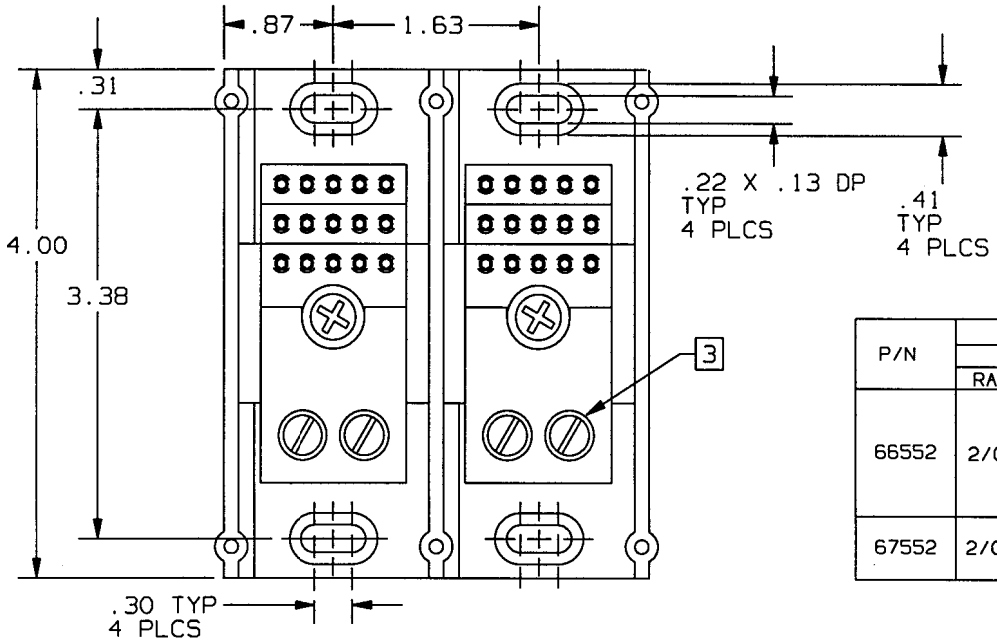

P/N	WIRE RANGE & TORQUE (IN-LBS)				UL		CSA
	PRIMARY		SECONDARY				
	RANGE	TORQUE	RANGE	TORQUE	FILE #	GUIDE #	REPORT #
66552	2/0-#14	2/0-#3 50 #4- #6 45 #8 40 #10- #14 35	#10-#14	#10-#14 15	E73571	XCFR2	LR69363
67552	2/0-#14	2/0-#6 120 #8 - #14 50	#10-#14	#10-#14 15	E73571	XCFR2	LR15469

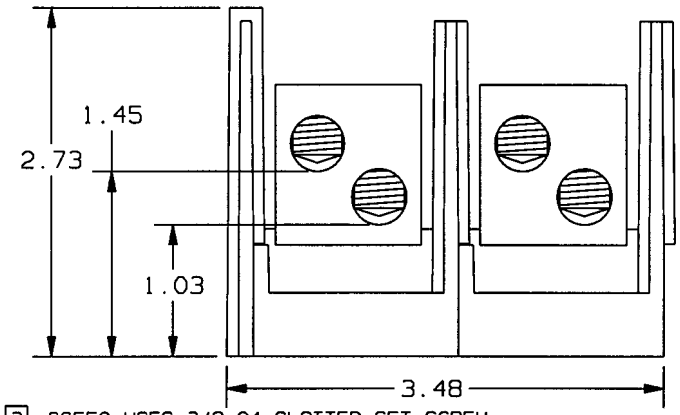

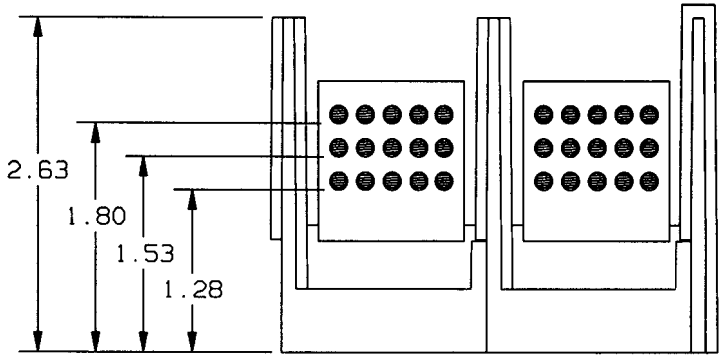

P/N 66552 (CU ONLY)
67552 (CU-AL)

3 66552 USES 3/8-24 SLOTTED SET SCREW
67552 USES 7/16-20 HEX SET SCREW

2. (2) 2/0 X (15) #10, 2 POLE, 600V.

1. MATERIAL COMPOSITION AND RATING:
BASE: THERMOPLASTIC 125°C RTI
CONNECTOR: ALUMINUM OR COPPER ALLOY-TIN PLATED

NOTES: UNLESS OTHERWISE SPECIFIED

GOULD
GOULD INC.
P.O. BOX 729
MARBLE FALLS, TX 78654
CIRCUIT PROTECTION DIV.

DRAWN BY:	DATE:	INIT. REL.
KDS	7/93	
CHECKED BY:	DATE:	SCALE:
AE	7/93	NONE

TOLERANCE TO BE APPLIED UNLESS OTHERWISE SPECIFIED: .XXXX±.0005±, .XXX±.005±, .XX±.01±, .X±.02±, X/X±1/32
UNSPECIFIED ANGLES±1°, SPECIFIED ANGLES±0°30'
DIMENSIONS APPLY AFTER PLATING
ALL SURFACES TO BE 125 UNLESS OTHERWISE SPECIFIED
BREAK ALL SHARP EDGES
THIS DRAWING AND ALL INFORMATION THERE ON IS THE PROPERTY OF GOULD INC. AND IS SUBJECT TO RETURN ON DEMAND. THIS INFORMATION IS CONFIDENTIAL AND MUST NOT BE MADE PUBLIC OR COPIED UNLESS AUTHORIZED.

REFDOC:

DESCRIPTION: PDB, (2)2/0 X (15)#10

IDENTIFICATION NO. & REVISION: 05B0440 00