REV	DATE	ECO	DESCRIPTION	BY	CK
00	3/92		RELEASED	DY	GO

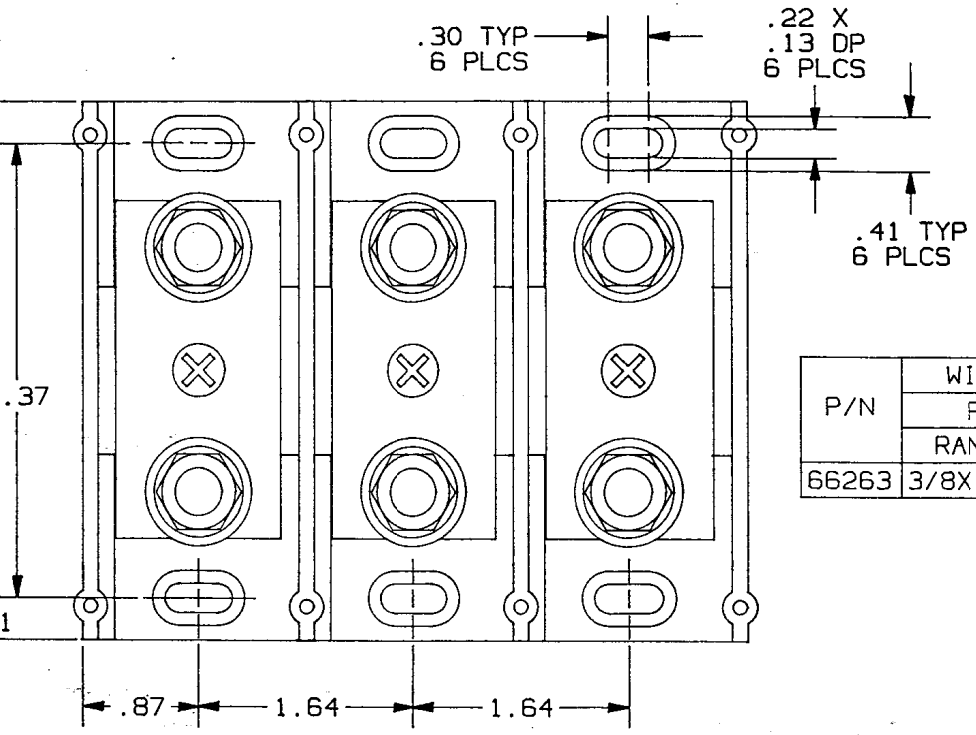

P/N	WIRE RANGE & TORQUE (IN-LBS)				U/L		CSA
	PRIMARY		SECONDARY				
	RANGE	TORQUE	RANGE	TORQUE	FILE #	GUIDE #	REPORT #
66263	3/8X1-1/8	228	3/8X1-1/8	228	E73571	XCFR2	LR69363

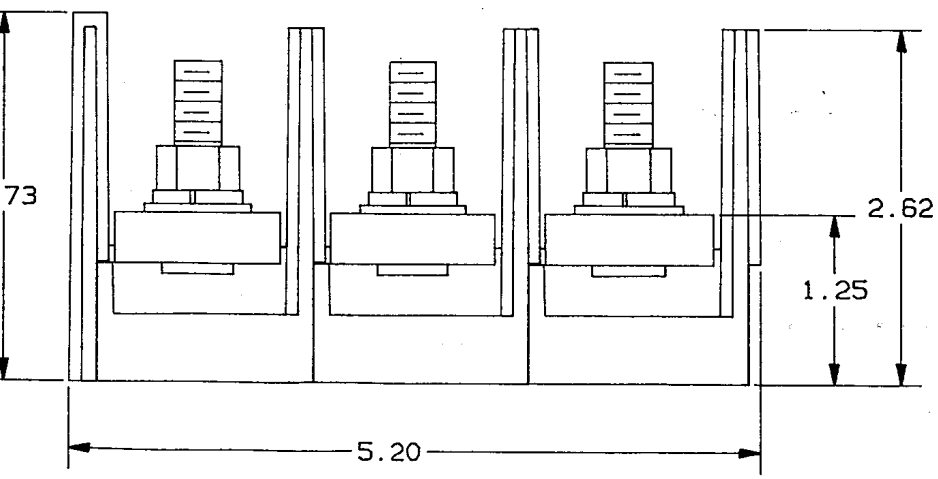

2. CONNECTOR-COPPER ALLOY-TIN PLATED.
1. MATL COMPOSITION AND RATING:
   THERMOPLASTIC-125°C RTI

NOTES: UNLESS OTHERWISE SPECIFIED

REFERENCE

P/N 66263 MAR 2 3 1992

GOULD
CIRCUIT PROTECTION DIV.
GOULD INC.
P.O. BOX 729
MARBLE FALLS, TX 78654

TOLERANCE TO BE APPLIED UNLESS OTHERWISE SPECIFIED: .XXXX±.0005; .XXX±.005; .XX±.01; .X±.04; X/X±1/64
UNSPECIFIED ANGLES±1°. SPECIFIED ANGLES±0°30'
DIMENSIONS APPLY AFTER PLATING
ALL SURFACES TO BE 125 UNLESS OTHERWISE SPECIFIED
BREAK ALL SHARP EDGES
THIS DRAWING AND ALL INFORMATION THERE ON IS THE PROPERTY OF GOULD INC. AND IS SUBJECT TO RETURN ON DEMAND. THIS INFORMATION IS CONFIDENTIAL AND MUST NOT BE MADE PUBLIC OR COPIED UNLESS AUTHORIZED.

DRAWN BY:	DATE:	INIT. REL.
RW	3/92	92-036
CHECKED BY:	DATE:	SCALE:
GO	3/92	NONE

REFDOC:•

DESCRIPTION: PDB (1)3/8-16 X (1)3/8-16

IDENTIFICATION NO. & REVISION: 05B0381