REV	DATE	ECO	DESCRIPTION	BY	CK
00	7/6/95		RELEASED		

CONTROLLED COPY
ISSUED TO Newburyport
DATE JUL 12 1995

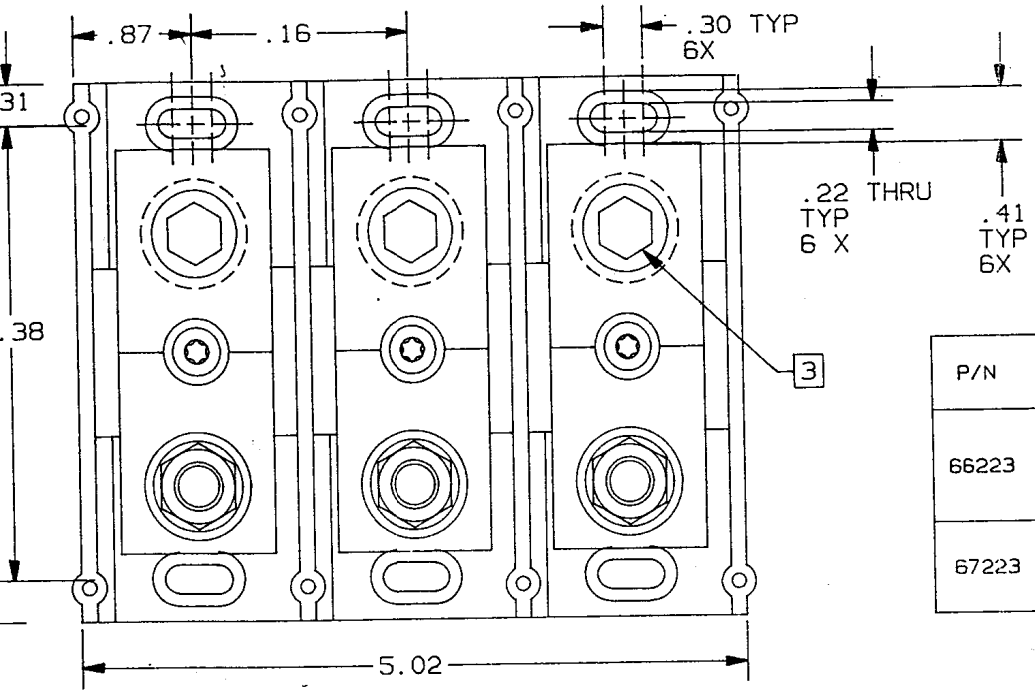

P/N	WIRE RANGE & TORQUE (IN-LBS)					UL		CSA
	PRIMARY			SECONDARY				
	RANGE	TORQUE		RANGE	TORQUE	FILE #	GUIDE #	REPORT #
66223	500MCM-#4	500MCM-#4	375	3/8 STUD	228	E73571	XCFR2	LR15469
67223	500MCM-#4	500MCM-#4	500	3/8 STUD	228	E73571	XCFR2	LR15469

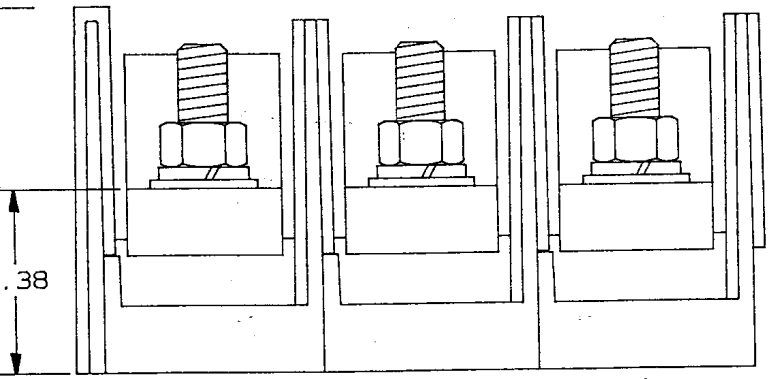

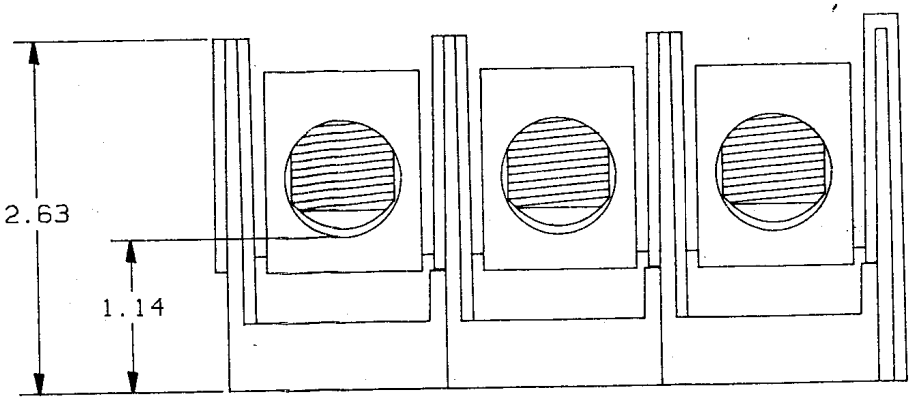

3 P/N 66223 USES 3/8 HEX DRIVER
P/N 67223 USES 7/16 HEX DRIVER

2. (1) 500MCM - #4 X (1) 3/8 STUD, 600V., 3 POLE

1. MATERIAL COMPOSITION AND RATING:
BASE: THERMOPLASTIC 125°C RTI
CONNECTOR: ALUMINUM OR COPPER ALLOY-TIN PLATED

NOTES: UNLESS OTHERWISE SPECIFIED

P/N 66223 (CU ONLY)
67223 (CU-AL)

GOULD CIRCUIT PROTECTION DIV.
GOULD INC. P.O. BOX 729 MARBLE FALLS, TX 78654

DRAWN BY:	DATE:	INIT. REL.
KDS	7/95	
CHECKED BY:	DATE:	SCALE:
		NONE

DESCRIPTION: PDB

TOLERANCE TO BE APPLIED UNLESS OTHERWISE SPECIFIED: .XXXX±.0005; .XXX±.005; .XX±.01; .X±.03; X/X±1/32
UNSPECIFIED ANGLES±1°, SPECIFIED ANGLES±0°30'
DIMENSIONS APPLY AFTER PLATING
ALL SURFACES TO BE 125√ UNLESS OTHERWISE SPECIFIED
BREAK ALL SHARP EDGES
THIS DRAWING AND ALL INFORMATION THERE ON IS THE PROPERTY OF GOULD INC. AND IS SUBJECT TO RETURN ON DEMAND. THIS INFORMATION IS CONFIDENTIAL AND MUST NOT BE MADE PUBLIC OR COPIED UNLESS AUTHORIZED.
REFDOC:

IDENTIFICATION NO. & REVISION: 0580518 00