REV	DATE	ECO	DESCRIPTION	BY	CK
00	4/94		RELEASED	GO	

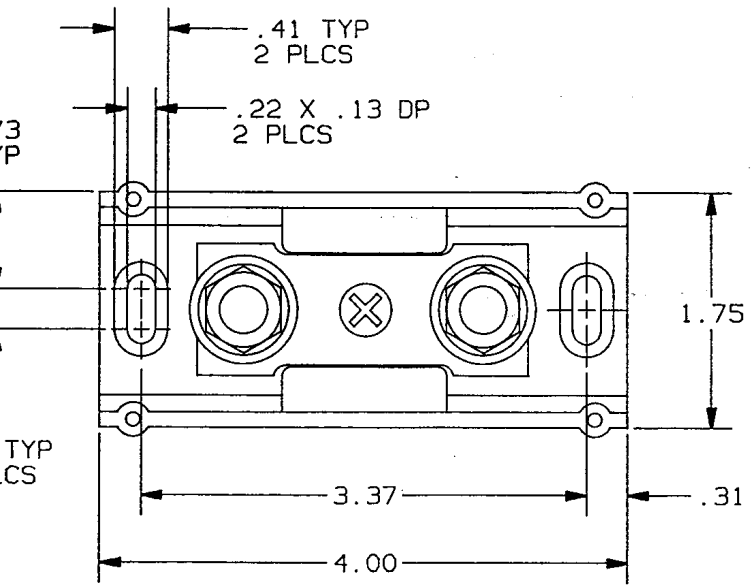

P/N	WIRE RANGE & TORQUE (IN-LBS)				U/L		CSA
	PRIMARY		SECONDARY				
	RANGE	TORQUE	RANGE	TORQUE	FILE #	GUIDE #	REPORT #
66201	3/8" STUD	228	3/8" STUD	228	E73571	XCFR2	LR69363

CONTROLLED COPY
ISSUED TO Newburyport
DATE MAY 0 5 1994

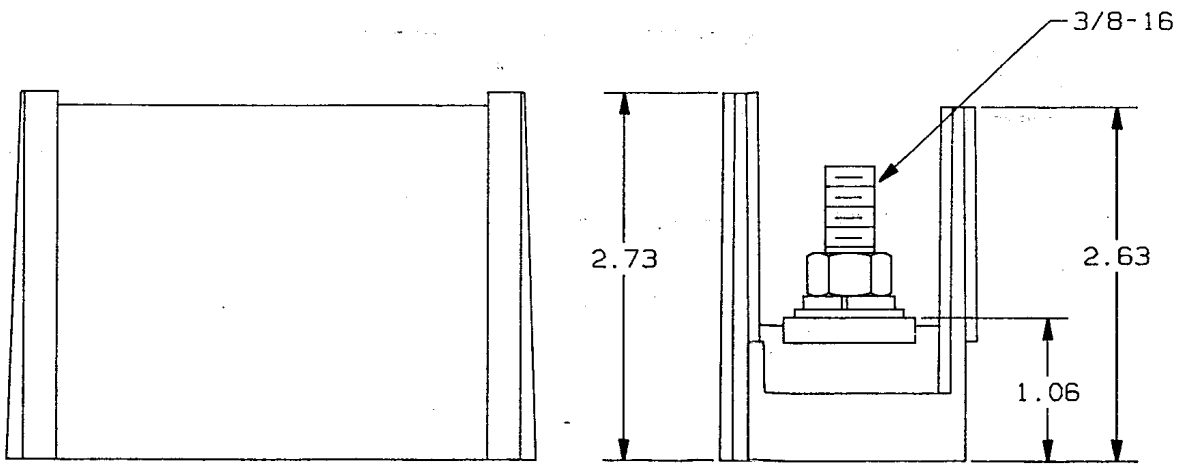

2. (1)3/8-16 X 1 1/2 X (1)3/8-16 X 1 1/2 1 POLE, 600V.
1. MATL COMPOSITION AND RATING:
   BASE-THERMOPLASTIC-125°C RTI
   CONNECTOR-COPPER ALLOY-TIN PLATED.

NOTES: UNLESS OTHERWISE SPECIFIED

P/N 66201 (CU ONLY)

GOULD
GOULD INC.
P.O. BOX 729
MARBLE FALLS, TX 78654
CIRCUIT PROTECTION DIV.

DRAWN BY:	DATE:	INIT. REL.
KDS	4/94	
CHECKED BY:	DATE:	SCALE:
GHO	4/94	NONE

TOLERANCE TO BE APPLIED UNLESS OTHERWISE SPECIFIED: .XXXX±.0005; .XXX±.005; .XX±.01; .X±.02; X/X±1/32
UNSPECIFIED ANGLES±1°, SPECIFIED ANGLES±0°30'
DIMENSIONS APPLY AFTER PLATING
ALL SURFACES TO BE 125√ UNLESS OTHERWISE SPECIFIED
BREAK ALL SHARP EDGES
THIS DRAWING AND ALL INFORMATION THERE ON IS THE PROPERTY OF GOULD INC AND IS SUBJECT TO RETURN ON DEMAND. THIS INFORMATION IS CONFIDENTIAL AND MUST NOT BE MADE PUBLIC OR COPIED UNLESS AUTHORIZED.
REFDOC:

DESCRIPTION	IDENTIFICATION NO. & REVISION	
PDB, 3/8 X 3/8 1 POLE	05B0478	00