REV	DESCRIPTION	DATE	APPD
0	RELEASED	6/25/90	SD
01	REVISED PER ECO 90-023	7/19/90	[illegible]

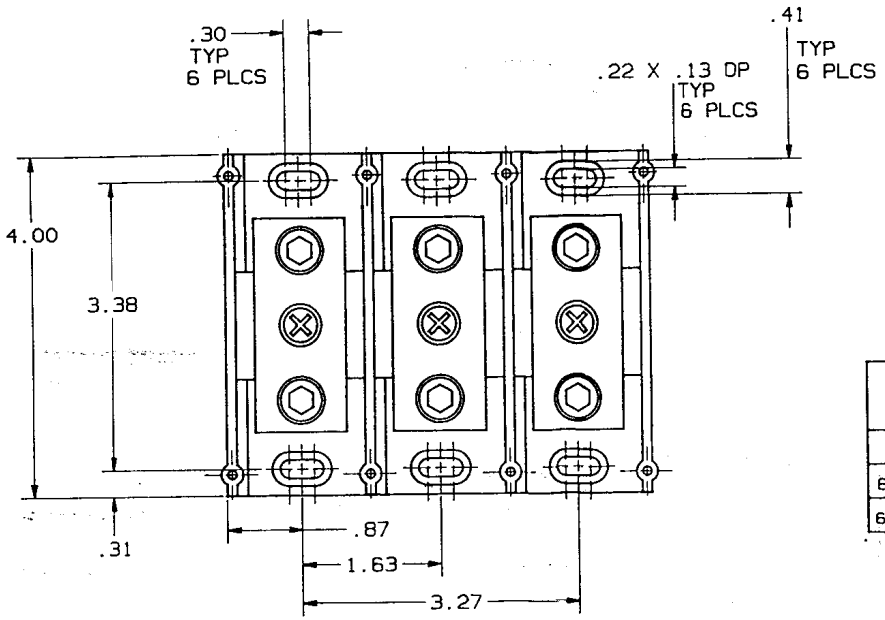

TABLE I

P/N	WIRE RANGE & TORQUE (IN-LBS)				U/L		CSA
	PRIMARY		SECONDARY				
	RANGE	TORQUE	RANGE	TORQUE	FILE NO.	GUIDE NO.	REPORT NO.
66003	350-#6	275	350-#6	275	E73571	XCFR2	LR69363
67003	350-#6	275	350-#6	275	E73571	XCFR2	LR15469

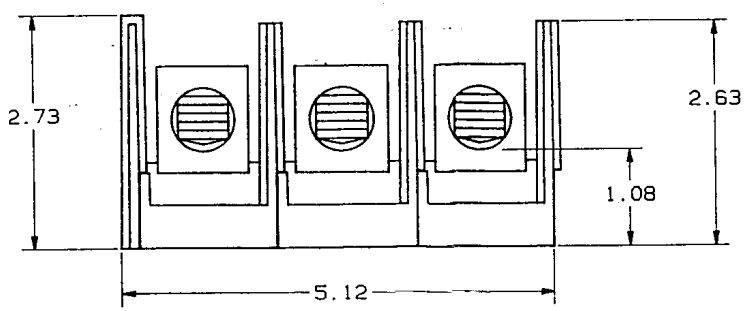

REFERENCE
MAR 16 1992

P/N 66003 (CU ONLY)
P/N 67003 (CU-AL)

1. MATL COMPOSITION AND RATING: BASE-POLYCARBONATE-125°C RTI
CONNECTOR-ALUMINUM OR COPPER ALLOY-TIN PLATED.

NOTES: UNLESS OTHERWISE SPECIFIED

NOTES UNLESS OTHERWISE SPECIFIED
- ALL DIMENSIONS ARE IN INCHES
- STAMP OR ETCH DWG. NO. ON PART
- REMOVE ALL BURRS AND SHARP EDGES
- TOLERANCES: XXXX±.0005: XXX±.005: XX±.01: X±.04: ANGLES ±0°30'

THIS DRAWING AND ALL INFORMATION THEREON IS THE PROPERTY OF GOULD, IS CONFIDENTIAL, MUST NOT BE COPIED OR MADE PUBLIC UNLESS AUTHORIZED AND IS SUBJECT TO RETURN ON DEMAND.

ASSY DWG USED ON		REF OR SIM DWG	

MATERIAL
FINISH

SIGNATURES	DATE
DRWN [illegible]	6/27/90
CHKD G. Oberg	6/26/90
ENGD	
APPD [illegible]	7/19/90

GOULD SHAWMUT
GOULD SHAWMUT
P. O. BOX 729
MARBLE FALLS, TX 78654

PRODUCT INFO
TITLE
POB, (1)350MCM-#6 X (1)350-MCM-#6 3 POLE 600V

DWG NO	REV
05C0275	01
SCALE 1/1	FILE NO	SHEET 1 of 1