REV	DATE	ECO	DESCRIPTION	BY	CK
00	5/92		RELEASED	MY	GO

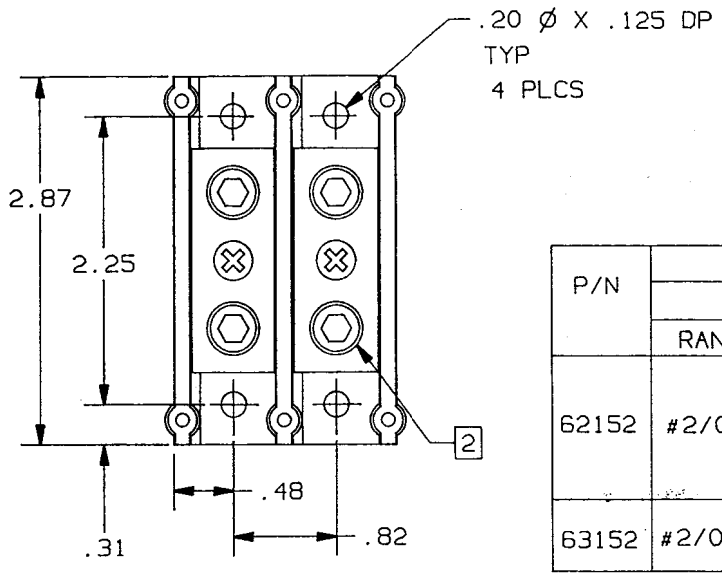

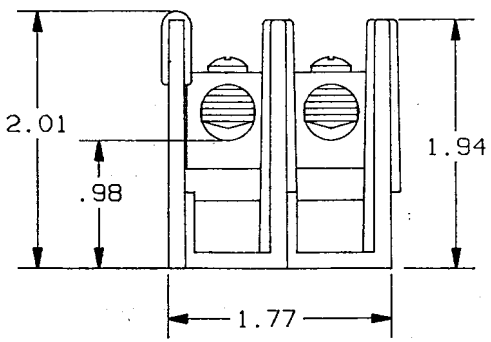

TABLE I

P/N	WIRE RANGE & TORQUE (IN-LBS)						UL		CSA
	PRIMARY			SECONDARY					
	RANGE	TORQUE		RANGE	TORQUE		FILE NO.	GUIDE NO.	REPORT NO.
62152	#2/0-#14	#2/0-#3	50	#2/0-#14	#2/0-#3	50	E73571	XCFR2	LR69363
		#4-#6	45		#4-#6	45			
		#8	40		#8	40			
		#10-#14	35		#10-#14	35			
63152	#2/0-#14	#2/0-#6	120	#2/0-#14	#2/0-#6	120	E73571	XCFR2	LR69363
		#8-#14	50		#8-#14	50			

REFERENCE

MAY 21 1992

3. (1) 2/0-#14 X (1) 2/0-#14 2 POLE 600V

[2] P/N 62152 USES SLOTTED SET SCREW
P/N 63152 USES HEX SET SCREW.

1. MATERIAL COMPOSITION AND RATING:
BASE-THERMOPLASTIC 125°C RTI
CONNECTOR-ALUMINUM OR COPPER ALLOY-TIN PLATED.

NOTES: UNLESS OTHERWISE SPECIFIED

P/N 62152 (CU ONLY)
P/N 63152 (CU-AL)

GOULD
GOULD INC.
P.O. BOX 729
MARBLE FALLS, TX 78654
CIRCUIT PROTECTION DIV.

DRAWN BY: KDS DATE: 4/92 INIT. REL. 92-055
CHECKED BY: DATE: SCALE: NONE

TOLERANCE TO BE APPLIED UNLESS OTHERWISE SPECIFIED: .XXXX±.00051, .XXX±.005; .XX±.01; .X±.02; X/X±1/32
UNSPECIFIED ANGLES±1°, SPECIFIED ANGLES±0°30'
DIMENSIONS APPLY AFTER PLATING
ALL SURFACES TO BE 125 UNLESS OTHERWISE SPECIFIED
BREAK ALL SHARP EDGES
THIS DRAWING AND ALL INFORMATION THERE ON IS THE PROPERTY OF GOULD INC. AND IS SUBJECT TO RETURN ON DEMAND. THIS INFORMATION IS CONFIDENTIAL AND MUST NOT BE MADE PUBLIC OR COPIED UNLESS AUTHORIZED.
REFDOC:

DESCRIPTION: PDB
IDENTIFICATION NO. & REVISION: 05B0276