REV	DESCRIPTION	DATE	APPD
0	RELEASED	9/1/90	

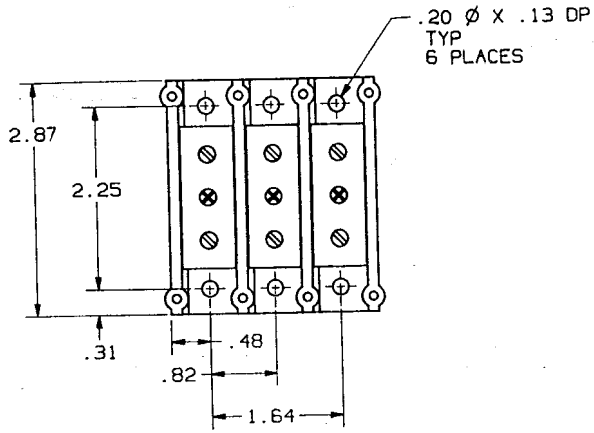

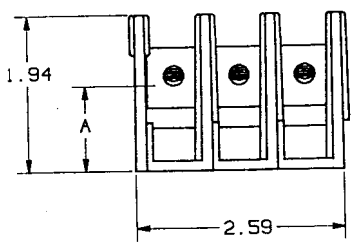

TABLE I

P/N	WIRE RANGE & TORQUE (IN-LBS)						U/L		CSA	A
	PRIMARY			SECONDARY						
	RANGE	TORQUE		RANGE	TORQUE		FILE NO.	GUIDE NO.	REPORT NO	
62103	#4-#14	#4-#6	35	#4-#14	#4-#6	35	E73571	XCFR2	LR69363	.90
		#8	25		#8	25				
		#10-#14	20		#10-#14	20				
63103	#4-#14	#4-#6	35	#4-#14	#4-#6	35	E73571	XCFR2	LR69363	1.07
		#8	25		#8	25				
		#10-#14	20		#10-#14	20				

REFERENCE
MAR 16 1992

P/N 62103 (CU ONLY)
P/N 63103 (CU-AL)

1. MATL COMPOSITION AND RATING: BASE-POLYCARBONATE-125°C RTI
CONNECTOR-ALUMINUM OR COPPER ALLOY-TIN PLATED.

NOTES: UNLESS OTHERWISE SPECIFIED

NOTES UNLESS OTHERWISE SPECIFIED
- ALL DIMENSIONS ARE IN INCHES
- STAMP OR ETCH DWG. NO. ON PART
- REMOVE ALL BURRS AND SHARP EDGES
- TOLERANCES: XXXX±.0005; XXX±.005; XX±.01; X±.04; ANGLES ±0°30'

THIS DRAWING AND ALL INFORMATION THEREON IS THE PROPERTY OF GOULD, IS CONFIDENTIAL, MUST NOT BE COPIED OR MADE PUBLIC UNLESS AUTHORIZED AND IS SUBJECT TO RETURN ON DEMAND.

ASSY DWG USED ON		REF OR SIM DWG	

MATERIAL
FINISH

SIGNATURES	DATE
DRWN	10/1/90
CHKD	10/1/90
ENGD	
APPD	10/2/90

GOULD SHAWMUT
GOULD SHAWMUT
P. O. BOX 729
MARBLE FALLS, TX 78654

PRODUCT INFO
TITLE
PDB, (1)#4-#14 X (1)#4-#14 3 POLE 600V

DWG NO: 05C0315
REV: 00
SCALE: NONE
FILE NO:
SHEET: 1 of 1