REV	DATE	ECO	DESCRIPTION	BY	CK
00	4/27/92	92-050	RELEASED	[illegible]	GO

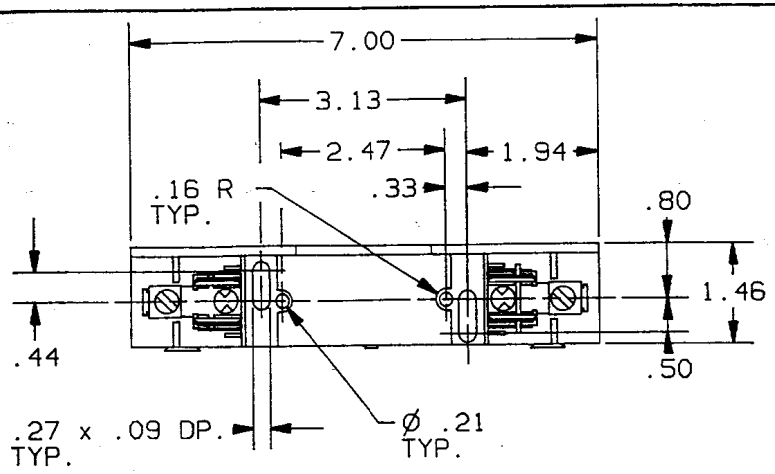

P/N	FUSE CLASS	RMS SYM RATING	TORQUE (IN-LBS)	WIRE °C	WIRE TYPE	UL FILE NO.	UL GUIDE NO.	CSA REPORT NO.
60300 [2]	H,K	10K	35	60/75	CU-AL	E52283	IZLT	LR32169
60305 60355 [3]	H,K	10K	35	60/75	CU-AL CU ONLY			
60305R 60355R	R	200K	35	60/75	CU-AL CU ONLY			

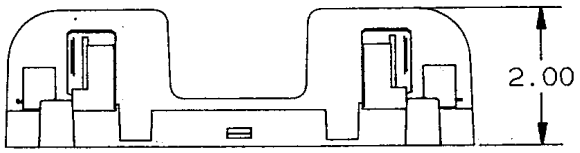

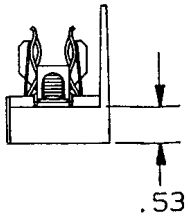

REFERENCE

APR 3 8 1992

P/N 60300(R) SPRF
P/N 60305(R) SPRF
P/N 60355(R) SPRF
ADD 'R' FOR CLASS R

4. 600V-30A ADDER BOX CONNECTOR

[3] OMIT REJECTION.

[2] OMIT SPRING AND REJECTION.

1. MATL COMPOSITION AND RATING: THERMOPLASTIC-125°C RTI.

NOTES:

GOULD
CIRCUIT PROTECTION DIV.
GOULD INC. P.O. BOX 729 MARBLE FALLS, TX 78654

DRAWN BY: KS	DATE: 4/92	INIT. REL.
CHECKED BY: GO	DATE:	SCALE: NONE

TOLERANCE TO BE APPLIED UNLESS OTHERWISE SPECIFIED: .XXXX±.0005; .XXX±.005; .XX±.01; .X±.02; X/X±1/32
UNSPECIFIED ANGLES±1°, SPECIFIED ANGLES±0°30'
DIMENSIONS APPLY AFTER PLATING
ALL SURFACES TO BE 125 UNLESS OTHERWISE SPECIFIED
BREAK ALL SHARP EDGES
THIS DRAWING AND ALL INFORMATION THERE ON IS THE PROPERTY OF GOULD INC. AND IS SUBJECT TO RETURN ON DEMAND. THIS INFORMATION IS CONFIDENTIAL AND MUST NOT BE MADE PUBLIC OR COPIED UNLESS AUTHORIZED.

REFDOC: -

DESCRIPTION: FUSE BLOCK

IDENTIFICATION NO. & REVISION: 05B0387